Power+Energy™

Fueling the Hydrogen Economy

HEMS-M Hydrogen Analyzer
User's Manual

Version 2.0

For use with HEMS-M™
May 16, 2016

Table of Contents

Power & Energy, Inc.
106 Railroad Drive
Ivyland, PA USA 18078
Tel: +1 215-942-4600
Fax: +1 215-942-9300
sales@powerandenergy.com
www.powerandenergy.com

General Overview

The HEMS instrument is an analyzer of pure hydrogen streams for the detection and quantification of impurities in the SAE/ISO specs shown in **Table 1**. The instrument is designed to take samples directly from a hydrogen feed supply through a dedicated sample line. The system is simply operated through a touch panel display and can be configured to automatically sample multiple times without an operator present.

HEMS-M is an acronym for *Hydrogen Elimination Measurement System Mobile* and it features proprietary sample concentration an injection technologies, P & E's novel palladium membrane technologies with commercial, off-the-shelf gas chromatography columns and thermal conductivity detectors. The system eliminates nearly all of the hydrogen from the sample while collecting and concentrating the gas impurities. The HEMS-M is portable and can be transported with the power on.

The HEMS-M instrument quantifies impurities in the ISO14687 and SAE-J2719 standards.

Gases Measured	SAE-J2719 ISO-14687	Targeted	
		Lower Detection Level	Upper Detection Level
	(ppm)	(ppm)	(ppm)
Nitrogen (N2)	100	25	150
Helium (He)*	300	75	450
Argon (Ar)*	100	25	150
Carbon Monoxide (CO)	0.2	0.05	0.3
Methane (CH4)*	2	0.5	10
Hydrocarbons C1-C3	2	0.5	3
Water (H2O)	5	1.6	7.5
Oxygen (O2)	5	1.3	7.5
Carbon Dioxide (CO2)	2	0.5	3
Ammonia	0.1	0.025	0.15
Hydrogen Sulfide (H2S)	0.004	0.001	0.006
Carbonyl Sulfide (COS)	incl.	incl	incl
Carbon Disulfide (CS2)	incl.	incl	incl

Table 1

HEMS-M Advantages

1) Resolves ppb and high ppt levels of contamination for H2S
2) Separates different molecular species with the same mass
3) Uses a GC column to separate N2 & CO
4) Measures a wider range of compounds vs. APIMS or optical methods
5) More compact, lower cost, low maintenance, lighter
6) Rugged and simple to operate
7) Capable of moving while powered on (except filament power must be off)

HEMS-M Key Benefits

1) On-site Analysis of Hydrogen Quality
2) Measurement time ~ 10 minutes
3) Concentrates Impurities from 1 to 20,000+ using proprietary technology
4) Sensitivity <1 ppb for Sulfur
5) Typical H2 flow rate (including carrier gas) is 170 sccm,
    a) average flow rate less than 100 sccm
    b) Sample size 750 scc
6) Generates UPH H2 carrier gas from the sample stream, purity <10 ppb
7) Measurements are made using Dual Analytical Columns and Thermal Conductivity Detectors using high precision and high speed A/D
8) All sample lines are 316L protected with Silconert coatings
9) Analysis can be done for other contaminates with calibration

Typical screenshot showing the analysis of a hydrogen sample

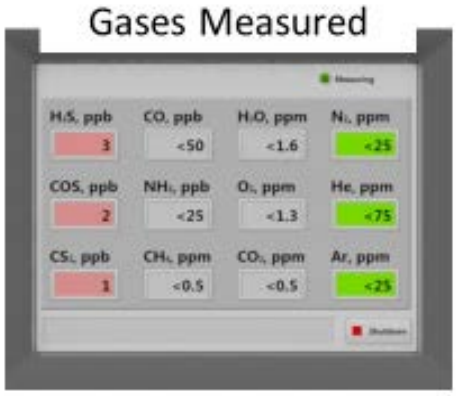

HEMS dimensions:
Height: 30.5" (775mm)
Width: 28.1" (713mm)
Depth: 22.3" (567mm)

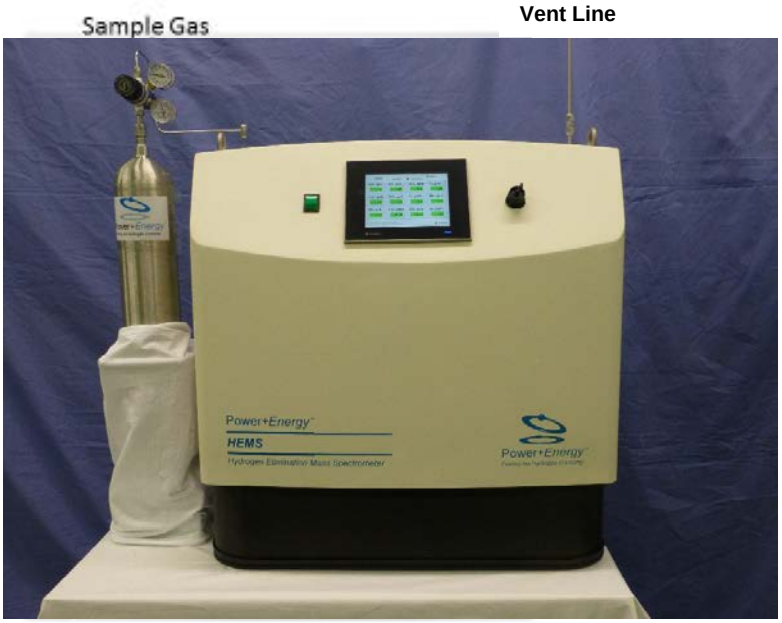

For quick and easy maintenance the HEMS-M cabinet can be opened to approximately 180 degrees

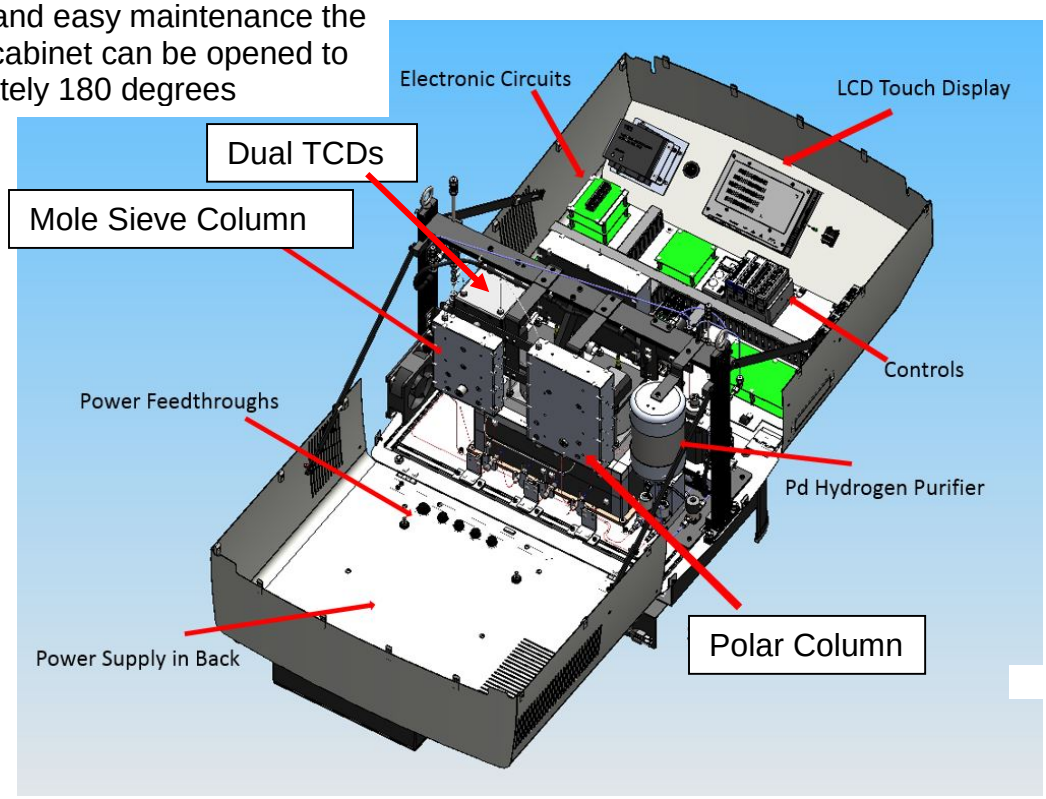

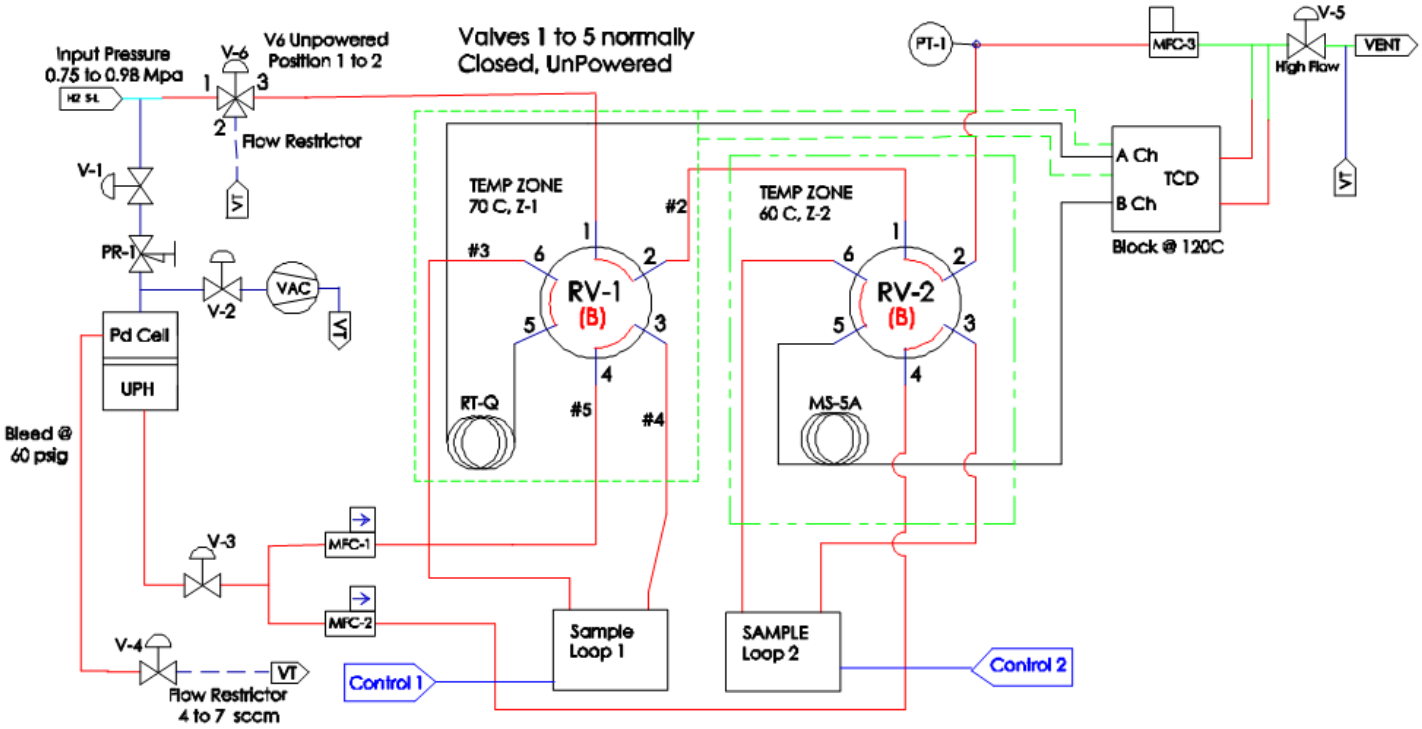

Quick Start Instructions

Installation

Upon receiving the instrument, inspect the unit for damage occurred during shipping. The unit is shipped 30 psig (0.2 MPa) of UHP Argon in order to reduce the risk of contamination. The instrument should be mounted on a flat, horizontal surface capable of supporting the weight of the instrument. It is important to leave enough clearance around the air vents not to obstruct air flow. The input air vents are located on both the left and right side of the instrument, the output air is primarily exiting the back of the unit. During operation, the instrument must not be moved to prevent component damage

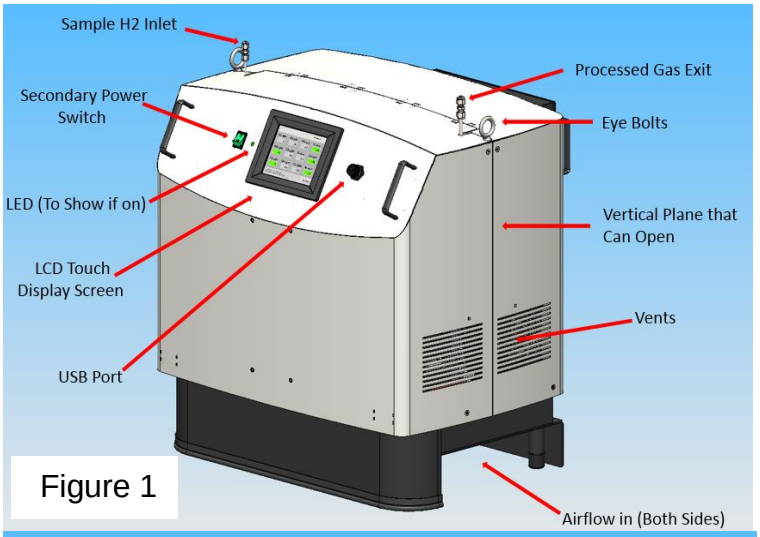

Figure 1

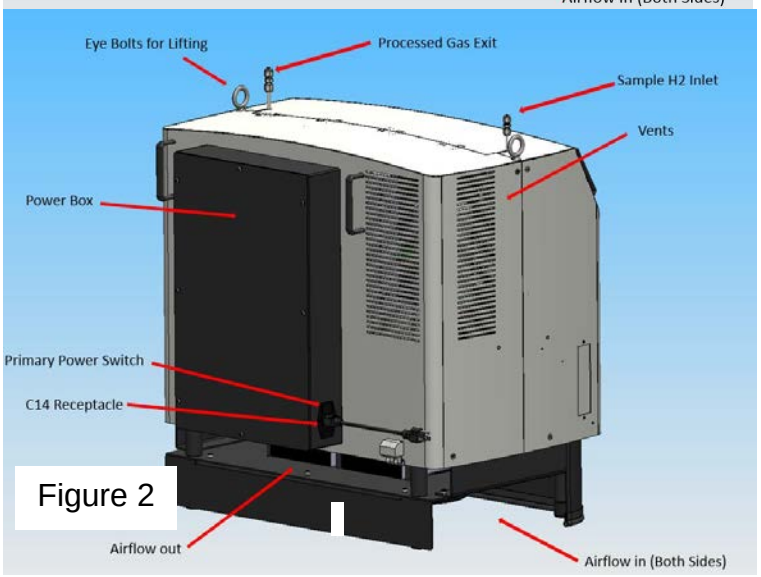

Figure 2

Figure 1: HEMS-M Front with labeled features (Note: secondary power is also known as filament power)
Figure 2: HEMS-M Back with labeled features

Power Connections

Using a power cord, connect the instrument to a power outlet shown in **Figure 2**. Inspect the power cord to make sure it is free of defects.
The instrument accepts input voltage in the range 85-265 VAC single phase and frequency in the range 47-63 Hz through a C14 receptacle located on the black rear panel on the instrument. This outlet includes the main power switch.

Gas Connections

Hydrogen gas to be analyzed is supplied to the instrument through a 1/8" sample inlet. All gas is vented through the ¼" gas port labeled "vent". Both sample and vent use high purity compression fittings.

Make the following connections before the operating the instrument, using exclusively fittings and tubing compatible with hydrogen and with the pressure ratings specified. Please refer to **Figure 1 and 2** for recommended setup.

- **Sample Inlet.** This port should be connected to the hydrogen sample to analyze. Respect the following ratings in Japan:
    - Maximum pressure 0.98 MPa (142 PSIG) – do not exceed
    - Minimum hydrogen purity (99.975%)
    - Connect to port labeled Inlet with 1/8" compression fitting.
- **Vent**. Connect the port labeled vent to a safe location with sufficient ventilation using ¼" tubing with minimum inner diameter of 0.18"

NOTE: It is recommended to flush the sampling line connected to the sample inlet and purge for approximately 5 to 10 minutes at 100 sccm before making a measurement for the first time.

	CAUTION – MAKE SURE THE VENT IS CONNECTED TO A VENT LINE AND IS UNOBSTRUCTED
	NOTE – Follow industry standards for the connection of the vent. Make sure that the concentration of the hydrogen vented is not within the flammability limit
	WARNING – DO NOT EXCEED THE PRESSURE RATINGS SPECIFIED

Detailed Operation

System Startup and operation

- Read operating manual in its entirety before starting
- Connect the Power Cord into the receptacle in black electrical box at the back of the unit. Power up the instrument by turning on the main switch above the power receptacle as shown in **Figure 2**. Press the button to the left of the LCD display on the front of the cabinet shown in **Figure 1**.
- After a warm-up period of approximately 30 minutes the instrument is ready to measure. Make sure the pressure at the gas ports is in the range specified in the subsection gas connections of the installation section of this manual and turn on the secondary power switch (the filament power) in **Figure 1**
- When the system is ready to operate, a message on the LCD screen will indicate that it is ready for measurements. Start the analysis by touching the virtual button on the display labeled "Start Measurement".
- The instrument will automatically begin sampling gas from the sample inlet. Each measurement cycle requires approximately 10 minutes. The results of each analysis are displayed on the main screen, showing the concentration for each species present in the gas sample. During the measurement cycle, results for individual species will be displayed as each species is detected and quantified.

Data Transfer

- The program automatically writes the results of the analysis to memory. The data can be retrieved by inserting a USB memory device in the USB port on the front panel to the right of the display shown in **Figure 1** and pushing the virtual button labeled "SAVE TO USB DISK" on LCD display on the front of the instrument.
- After the program has completed copying the files to the USB device, a message will appear prompting the user to disconnect the USB device
- The USB stick can now be removed. The data thus gathered is saved in text format
- Data should look close to **Figures 3 -7**

System Shutdown

To turn off the instrument, push the button labeled "SHUTDOWN" on the main screen of the instrument. The software will automatically bring the instrument to a safe state. When the display indicates "Safe to Power Down", it is safe to shut off the main power switch on the back of the instrument shown in **Figure 2.** **Warning**: Premature shutdown of the main power can damage the internal palladium cell.

Examples

Sensitivity Examples

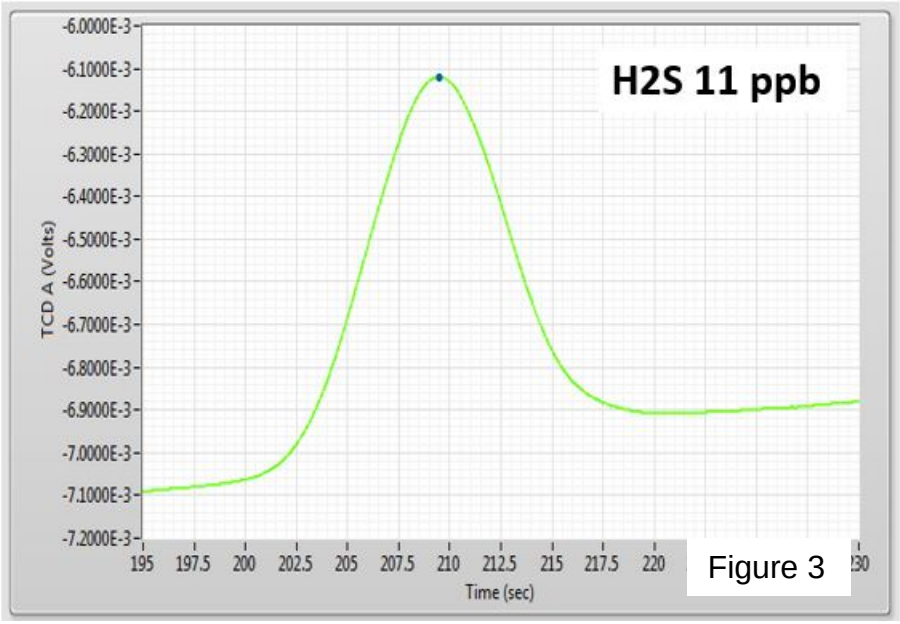

Figure 3: TCD sensor response to an 11 ppb hydrogen sulfide signal

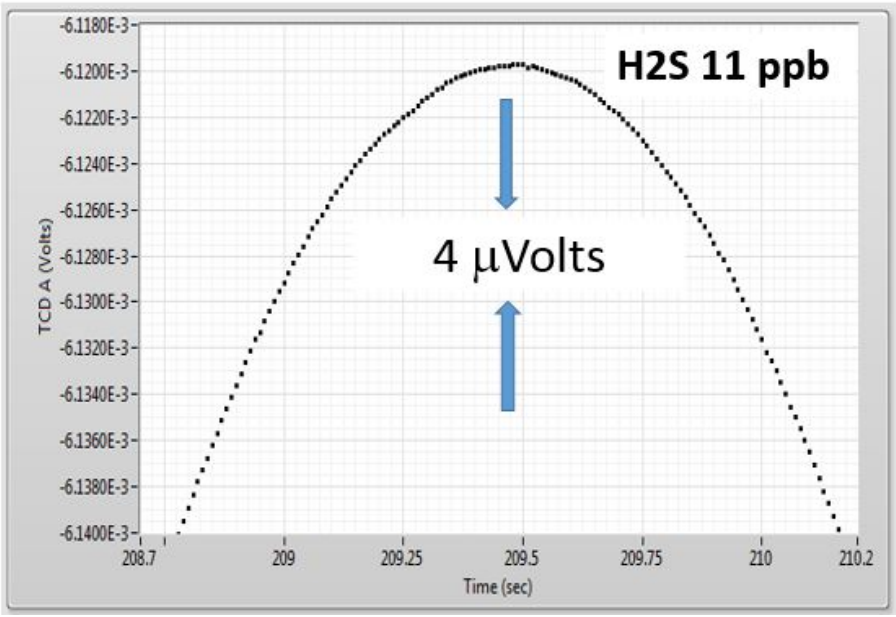

Figure 4

Figure 4: Zoomed in picture of **Figure 3**, primary resolution from a 24-bit high frequency data accusation algorithm

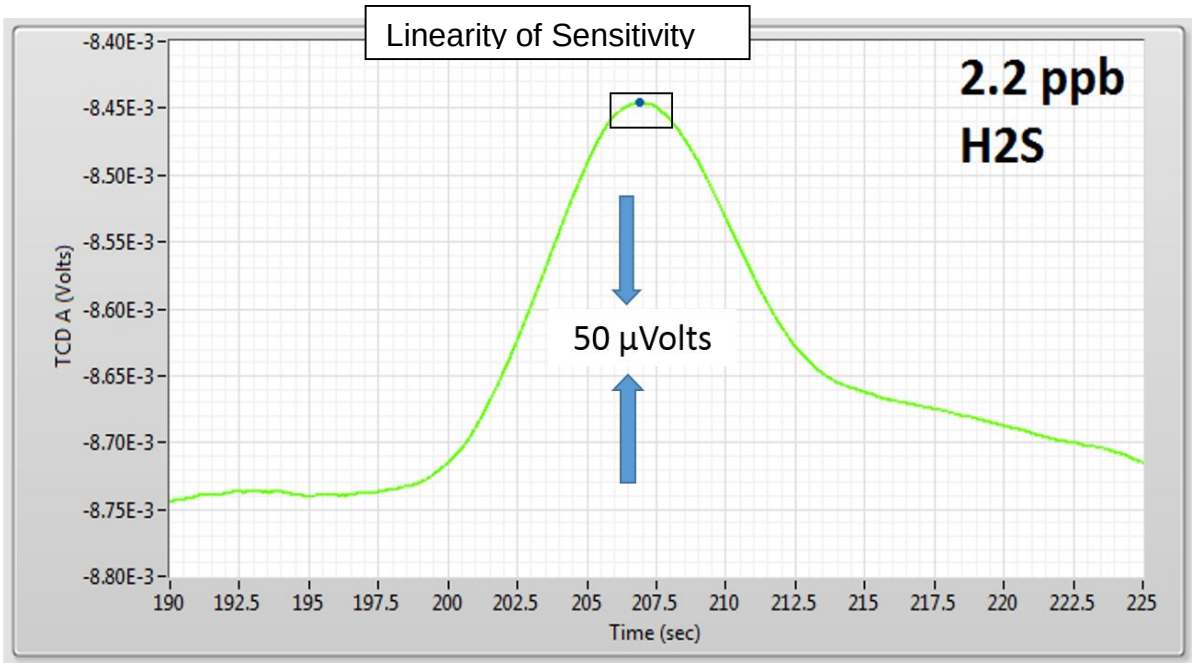

Figure 5: TCD sensor response to a 2.2 ppb hydrogen sulfide signal

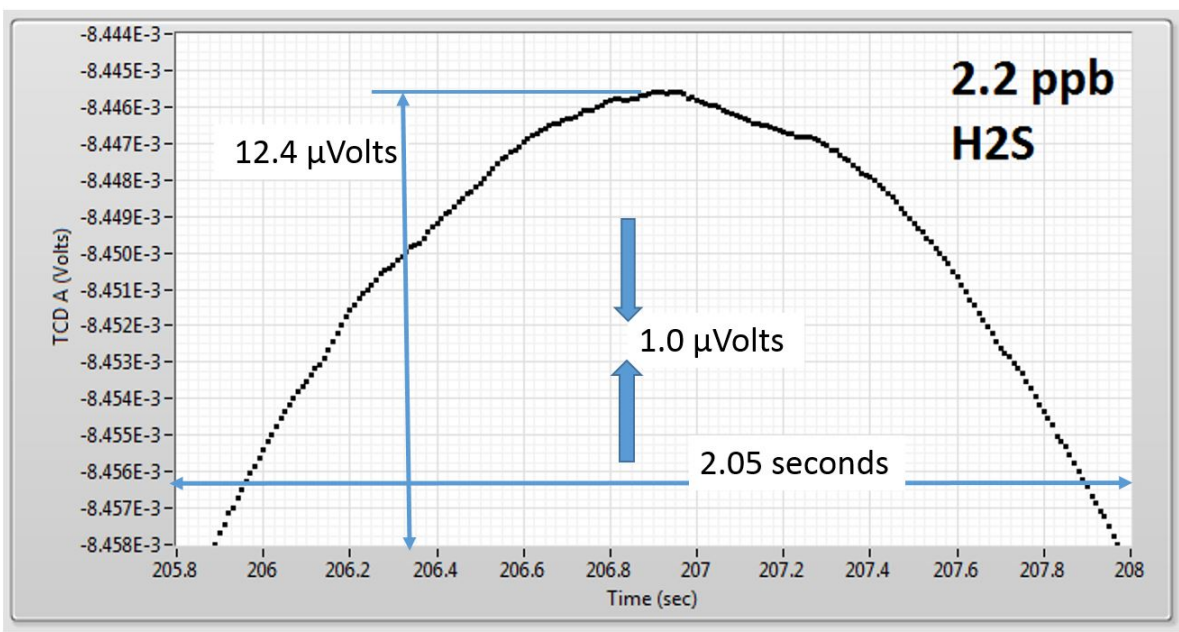

Figure 6: A zoomed in picture of **Figure 5,** primary resolution from a 24-bit high frequency data accusation algorithm

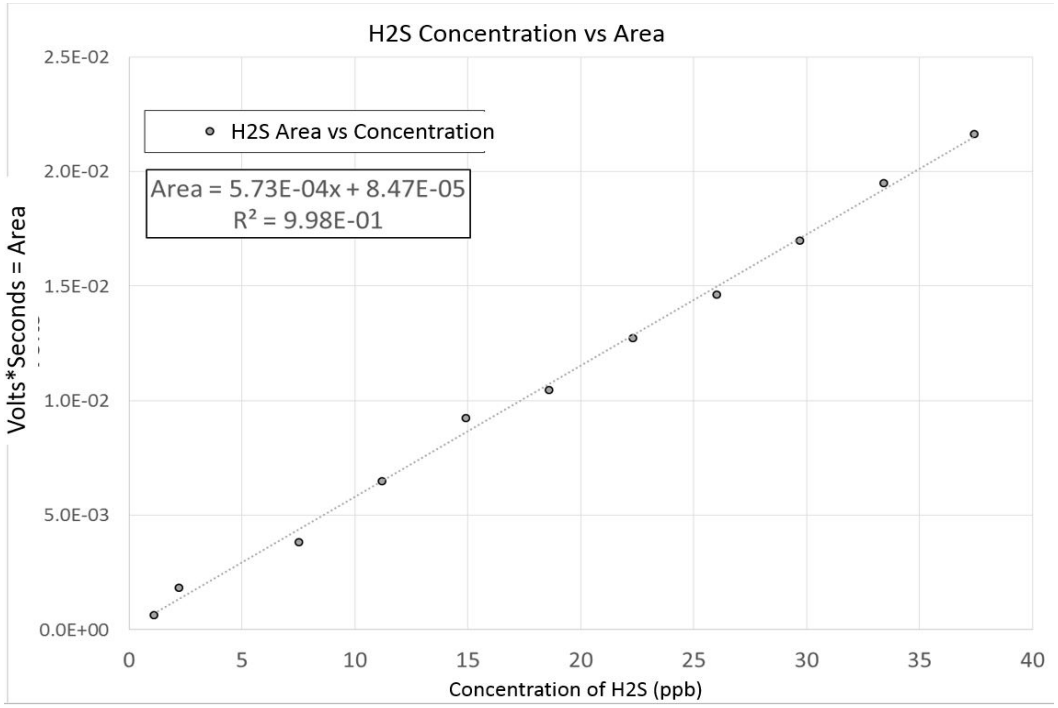

Figure 7: Linear relation between the area and the concentration of hydrogen sulfide give in ppb

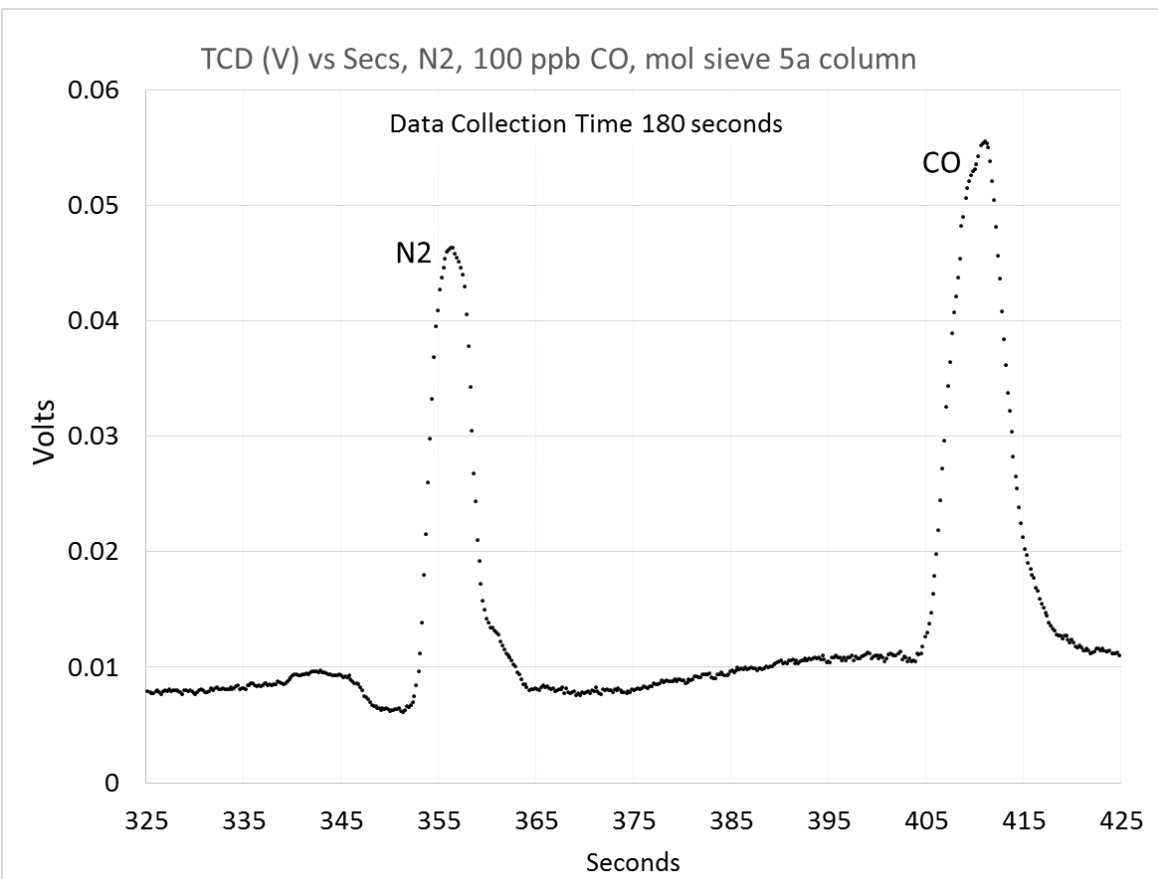

Figure 8. Example of separation of N2 and CO in H2

Definition of Terms

Symbols Used In this Manual

	CAUTION – Denotes a hazardous condition or procedure, which, if not properly adhered to, could cause damage to the equipment.
	NOTE – The Note sign denotes important information. It calls attention to a critical procedure, practice, or condition.
	WARNING – Denotes a hazardous condition or procedure, which, if not properly performed, will damage the equipment, and could cause injury to personnel. **Always proceed with care**.

Technical Specifications

Hydrogen Input:	
Recommended Minimum pressure:	101 PSIG / 0.8 MPa
Maximum pressure (Do not exceed):	142 PSIG / 0.98 MPa (.Japan & Korea)
Minimum Purity:	99.975%
Operating Temp Range:	
Minimum Temp	32° F – 0° C
Maximum Temp	104° F – 40° C
Electrical:	
Voltage	85-265 VAC
Frequency	47-63 Hz
Size	
Dimensions	H 30.5” (775 mm) x W 28.1” (713) x D 22.3” (567)
Weight	155 Lbs. (70 kg)

Troubleshooting

Troubleshooting Guide		
Problem	**Possible Cause**	**Correction**
Instrument does not power up	Instrument is not plugged in	Check plug, main power switch & main power source
The time needed for each measurement is longer than specified	Pressure at the sample inlet is not high enough	Increase pressure at the sample inlet (warning: do not exceed the pressure rating for the sample inlet)
Instrument valves do not operate properly	Solenoids are not powered	Confirm that both main and front panel power are switched on.

Limited Warranty

Limited Warranty: P+E warrants that all products sold shall conform to the P+E's standard specification for products, subject to reasonable manufacturing tolerances, for a period of one year for complete analytical systems. This warranty covers the electronics and the palladium cells against failure due to defects in materials and workmanship. Standard components and subsystems such as valves, fittings, instruments, controllers, etc. which are provided as an integral part of the products, will be guaranteed to the extent of the warranty offered by that manufacturer. The warranty coverage period starts from the date of shipment. This warranty excludes damage resulting from improper operation or misuse. This warranty does not extend to the process of manufacture nor to the quality of any other components, processes, facilities or equipment which are not supplied by P+E and in connection with which the product is to be used, and Purchaser shall hold P+E harmless from any suit, claim or damage, arising from or out of the use of this product. P+E shall not be responsible for work done, material furnished or repairs made by others unless agreed upon in writing, and reserves the right of doing or supervising any necessary repair work incident to putting products in proper operation. Purchaser agrees to use reasonable care in the operation and maintenance of products provided in accordance with instructions furnished by P+E.

Procedures for Obtaining Warranty Service

1) Write description of problem and email to the Organization that you purchased the HEMS-M from.

2) Contact your P&E distributor or call Power & Energy, Inc. to obtain a return merchandise authorization (RMA) number within the applicable warranty period. Power & Energy, Inc. will not accept any returned product without an RMA number.

3) If purchased directly from P&E Ship the product to Power & Energy, Inc., freight prepaid, together with your bill of sale or other proof of purchase, your name, address, description of the problem(s). Print the RMA number you have obtained on the outside of the package.

This device has been tested for electromagnetic emissions and immunity and has been found to be in compliance with the following directives for class A equipment:

EN 62500-6-2:2002
EN 55011:2000

This device complies with part 15 of the FCC Rules. Operation is subject to the following two conditions:

(1) This device may not cause harmful interference, and (2) this device must accept any interference received, including interference that may cause undesired operation.

Note: This equipment has been tested and found to comply with the limits for a Class A digital device, pursuant to part 15 of the FCC rules. These limits are designed to provide reasonable protection against harmful interference when the equipment is operated in a commercial environment. This equipment generates, uses, and can radiate radio frequency energy and, if not installed and used in accordance with the instruction manual, may cause harmful interference to radio communications. Operation of this device in a residential area is likely to cause harmful interference in which case the user will be required to correct the interference at his or her own expense.

Safety Information and Precautions

Service by Qualified Personnel Only

Operating personnel must not remove the instrument's cover. Component replacement, servicing, or calibration must be performed by qualified individuals, preferably Power & Energy ™ technicians. Improper disassembly may contaminate the plumbing inside the analyzer.

Use Caution When Handling Flammable Gases

Observe proper safety precautions and local regulations for the handling of flammable gases.

External Devices

All External devices that connect to this unit, including those suggested in this manual, must have fittings and usage consistent with the intended use of this product and the handling of hydrogen.

Connections

All connections to this unit must be made with proper gas fittings or electrical connectors. Gas connections should be leak-checked during installation.

Operate at Safe Pressures

Adhere to unit specifications and local safety regulations for handling pressurized gases. For safety, a suitable pressure relief valve should be used when inlet gases are pressure regulated from a compressed source.

Avoid Contamination

Do not allow dust, dirt or other contamination to enter the unit before or during use. Standard industry practices should be followed to ensure clean connections to the UPH port on the unit.

Temperature and Sunlight Exposure

Do not operate the instrument in areas where the enclosure is exposed to direct sunlight for extended periods or where the environmental conditions will cause the

internal temperature of the instrument to be more than 40°C (104°F) or less than 0°C (32°F).

Vibration and Shock

Avoid excessive vibration and shocks. The instrument contains securely mounted components, but some of these components may be damaged with excessive vibration or shock.

Hot Surfaces

Do not touch the Palladium Separation cell with bare fingers. Some components operate at 50°C when they exit the insulation and could potentially cause injury. Allow half an hour cool down time before servicing the unit.

Electrical

Operate only with proper AC voltage according to the purchase specifications.

Operational Parameters and Layout Overview

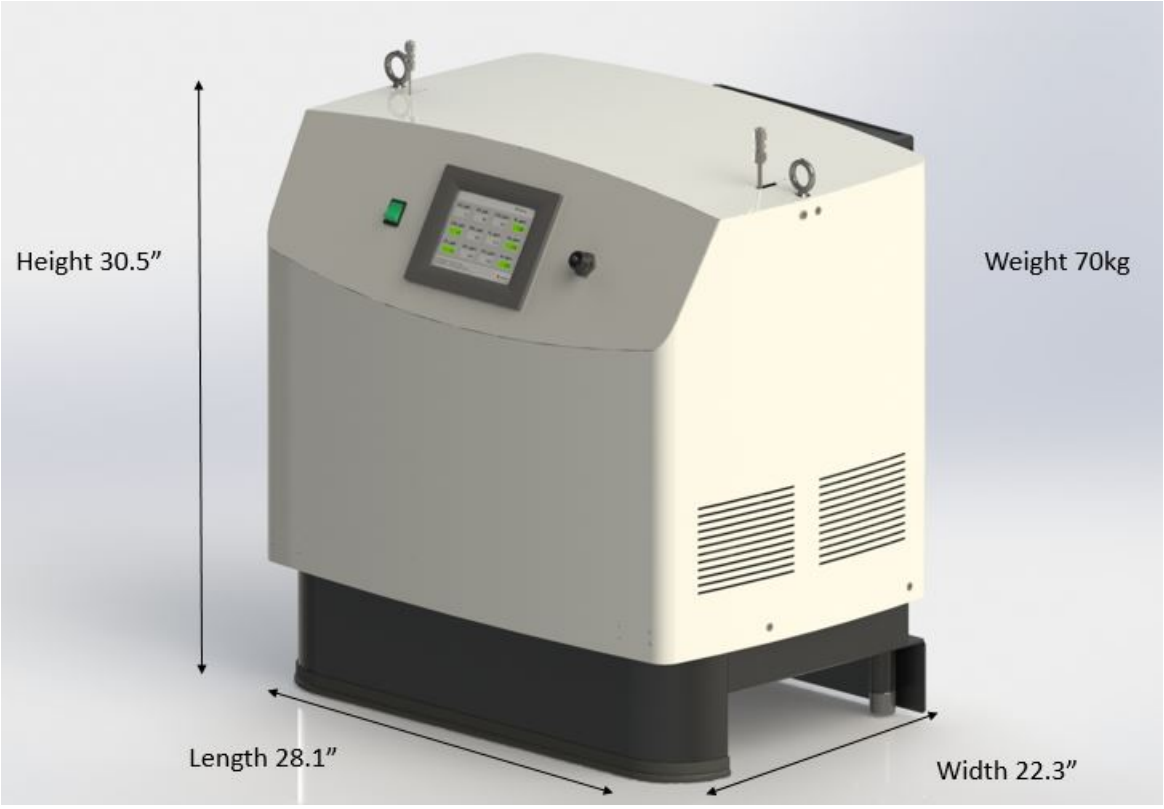

Setting Adjustable by Qualified User	Units	Default	Maximum	Minimum
TCD Shield temp	°C	50	65	45
TCD Block temp	°C	60	140	90
TCD Filament A temp	°C	250	270	90
TCD Filament B temp	°C	250	270	90
Polar column housing temp	°C	75	130	65
Mole sieve column housing temp	°C	60	130	55
Rear support #1 + #2	°C	75	130	65
Rear support #3 + #4	°C	60	130	55
MFC1 Q	sccm	2.5	5	0.5
MFC2 Q	sccm	2.5	5	0.5
MFC3 Q (MFR* sample is collected)	sccm	150	200	10
Polar column Collection Time	seconds	300	600	0*
Mole-Sieve column Collection Time	seconds	30	120	0*

* When set to zero seconds operates as a High Resolution GC Sample Loop

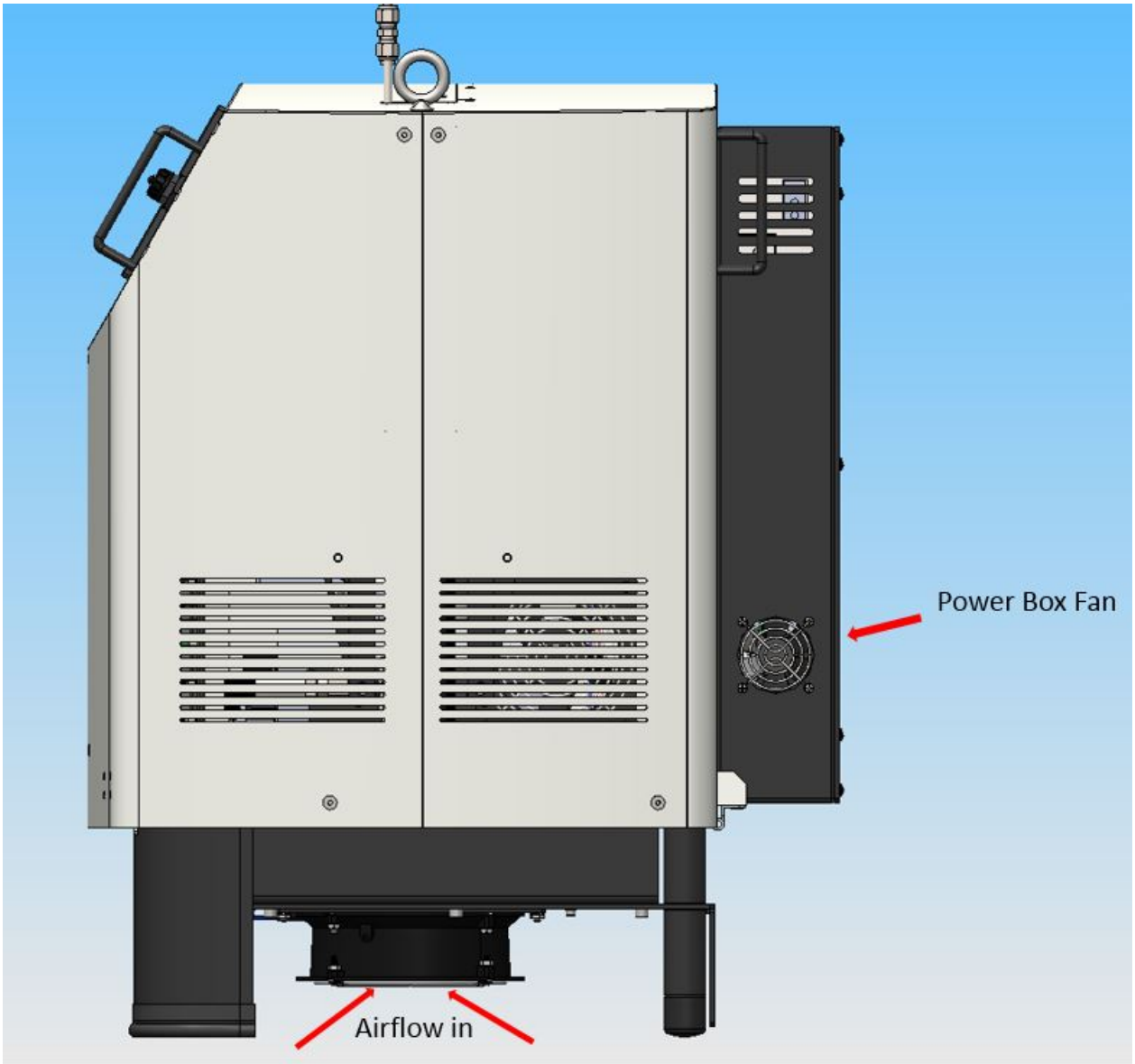
Power Box Fan
Airflow in

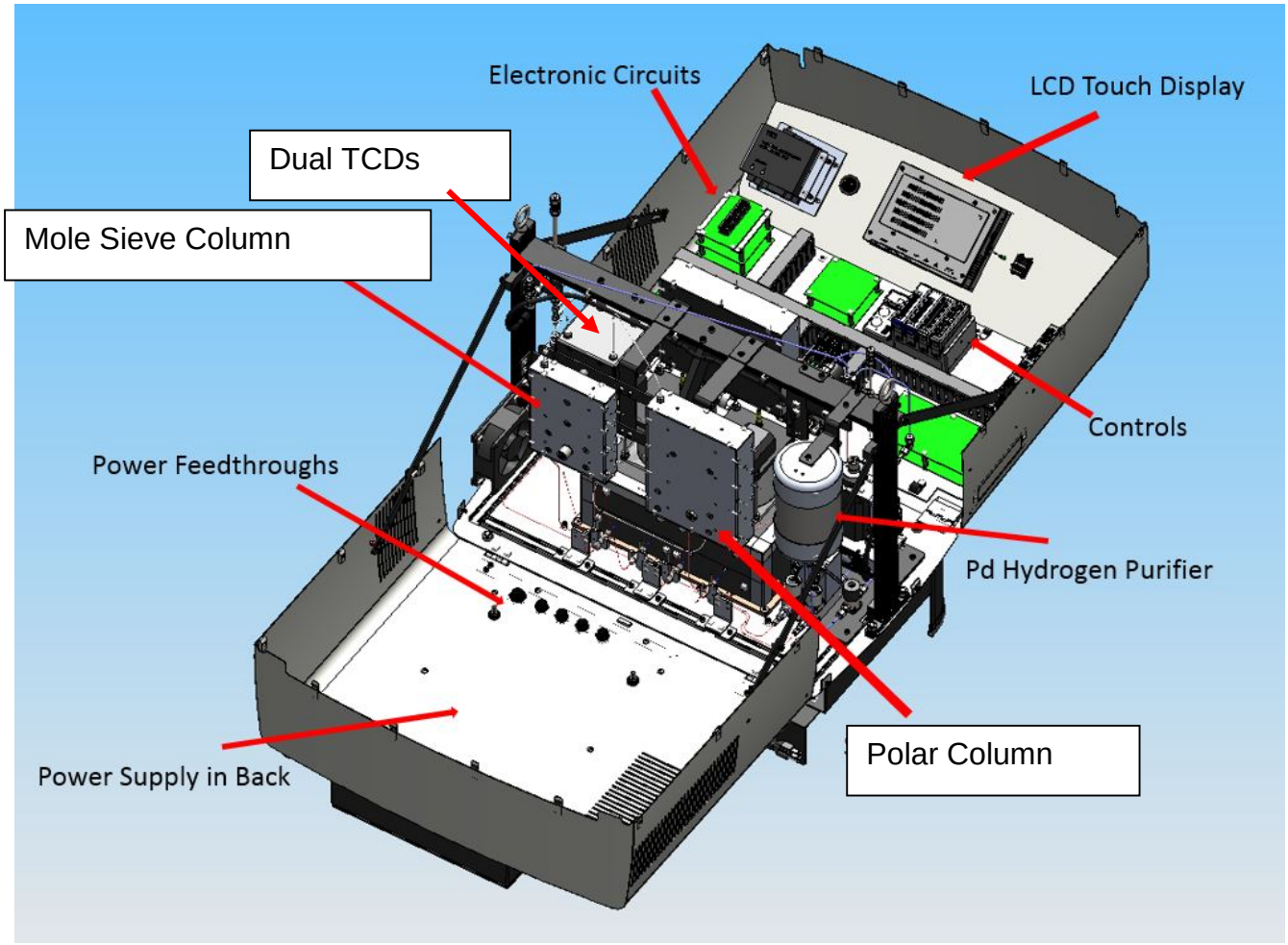
Electronic Circuits
LCD Touch Display
Dual TCDs
Mole Sieve Column
Controls
Power Feedthroughs
Pd Hydrogen Purifier
Polar Column
Power Supply in Back

Mechanical Drawings

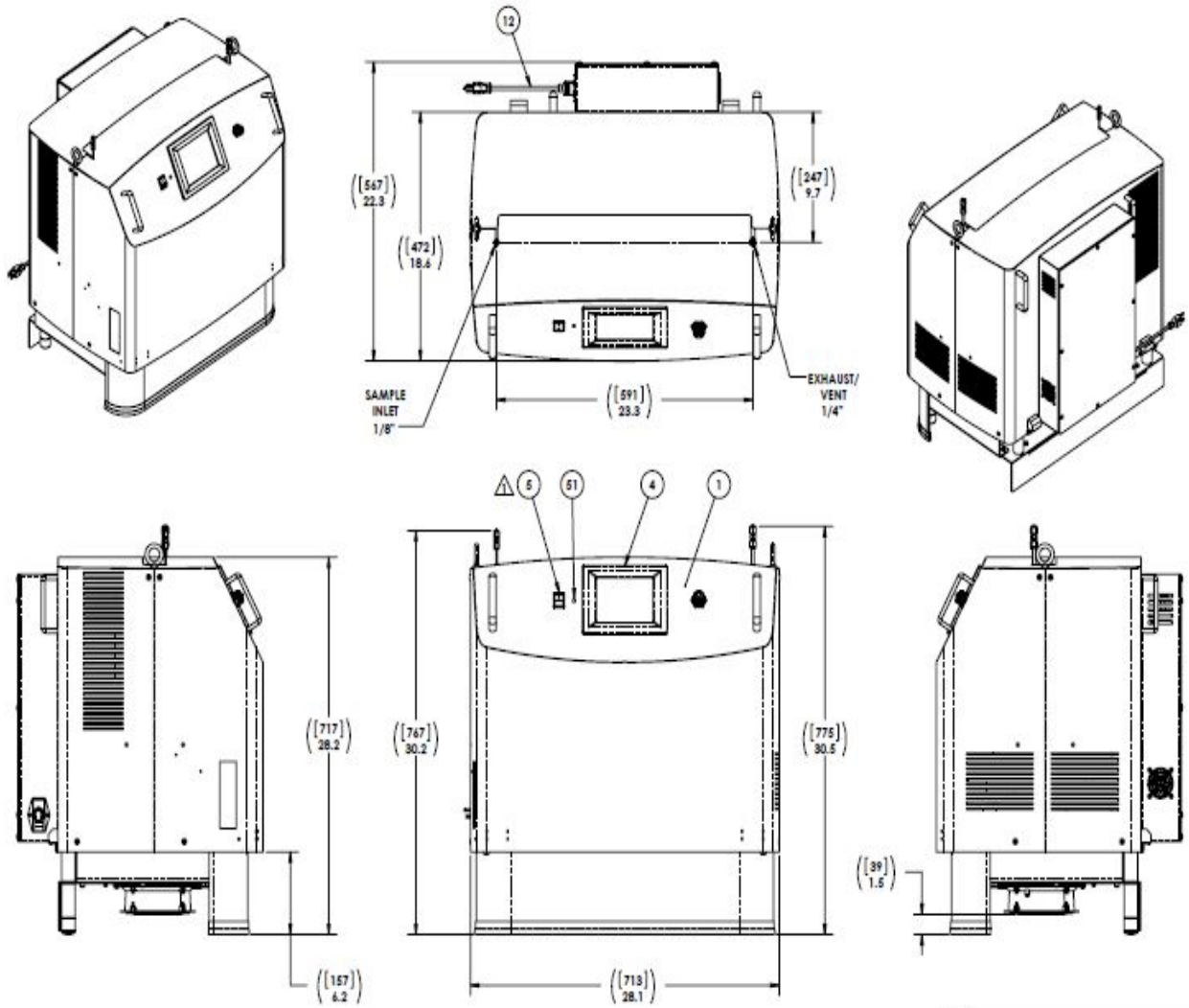

NOTES:
1. BILL OF MATERIAL, SHEET 3
2. TIGHTEN ALL FITTINGS IN ACCORDANCE WITH THE MANUFACTURERS RECOMMENDED TECHNIQUES AND PRACTICES.
3. SOME SMALL TUBES REQUIRE SPECIAL HANDLING. SEE RESPONSIBLE ENGINEER FOR DETAILS.

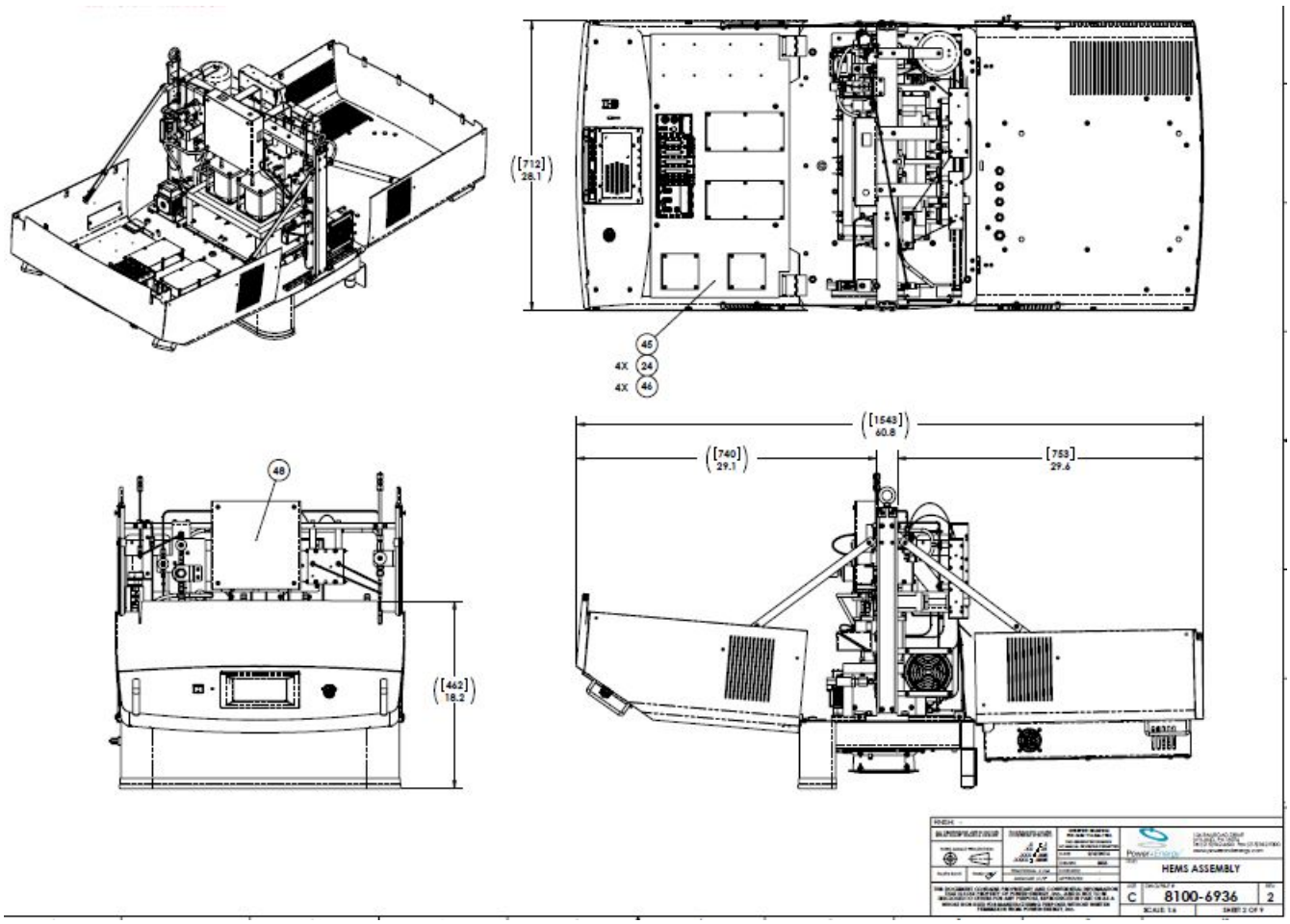
[712]
28.1
45
4X 24
4X 46
[1543]
60.8
[740]
29.1
[753]
29.6
48
[462]
18.2
HEMS ASSEMBLY
C
8100-6936
2

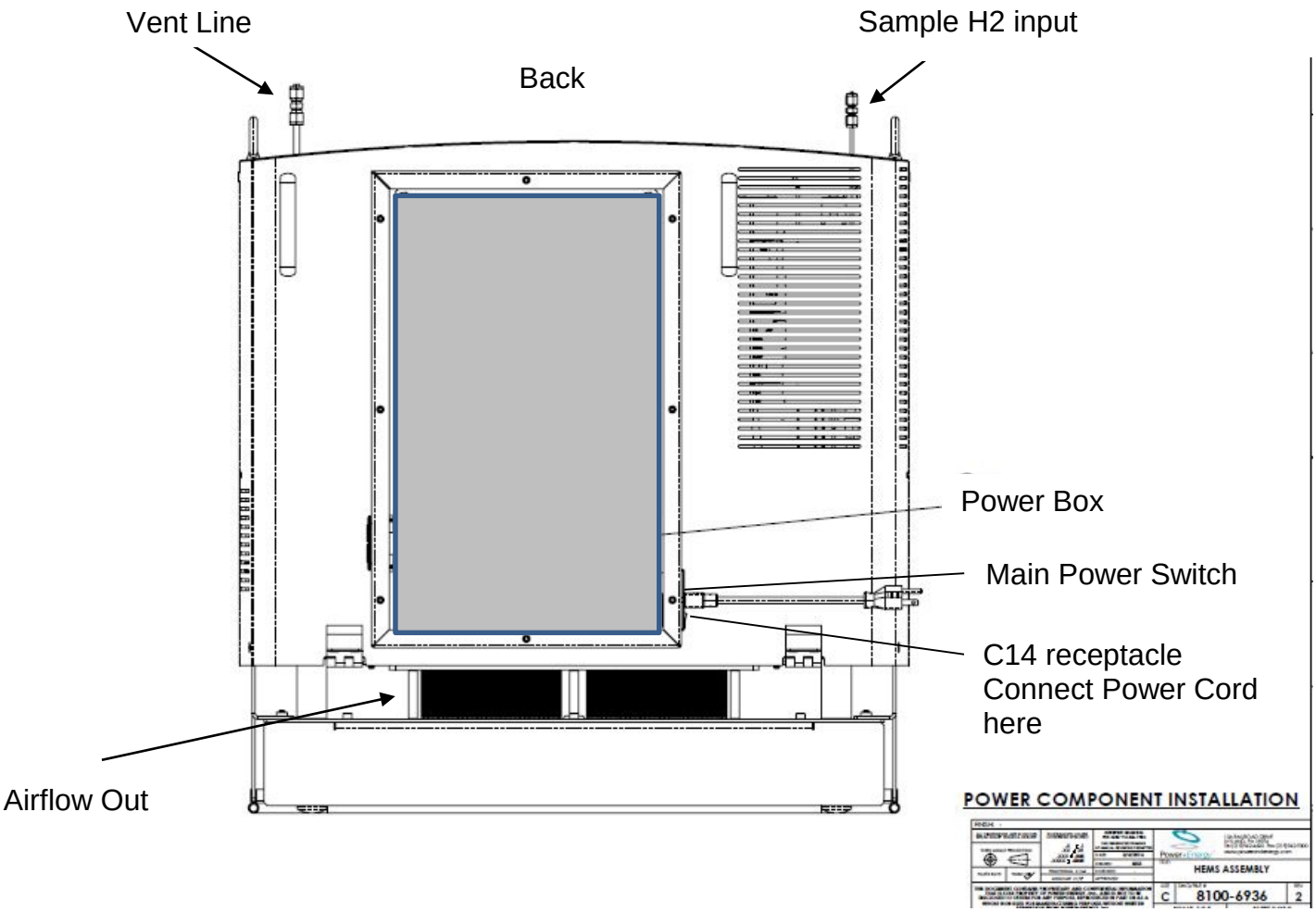
Vent Line
Sample H2 input
Back
Power Box
Main Power Switch
C14 receptacle
Connect Power Cord
here
Airflow Out
POWER COMPONENT INSTALLATION
HEMS ASSEMBLY
C
8100-6936
2

Power & Energy, Inc.
106 Railroad Drive
Ivyland, PA USA 18078
Tel: +1 215-942-4600
Fax: +1 215-942-9300
sales@powerandenergy.com
www.powerandenergy.com

Power+Energy™
Fueling the Hydrogen Economy